POWER DOOR LOCKS

Component Index

Body Control Module (BCM)
Door Lock Actuator-Driver7
Door Lock Actuator-Front Passenger
Door Lock Actuator-Left Rear
Door Lock Actuator-Liftgate
Door Lock Actuator-Right Rear
Driver Door Module (DDM)
Front Passenger Door Module (FPDM)
Fuse Block-Rear
Liftgate Module (LGM)
Lock Relay 18
Unlock Relay 24

Preliminary

POWER DOOR LOCKS

Circuit Schematic

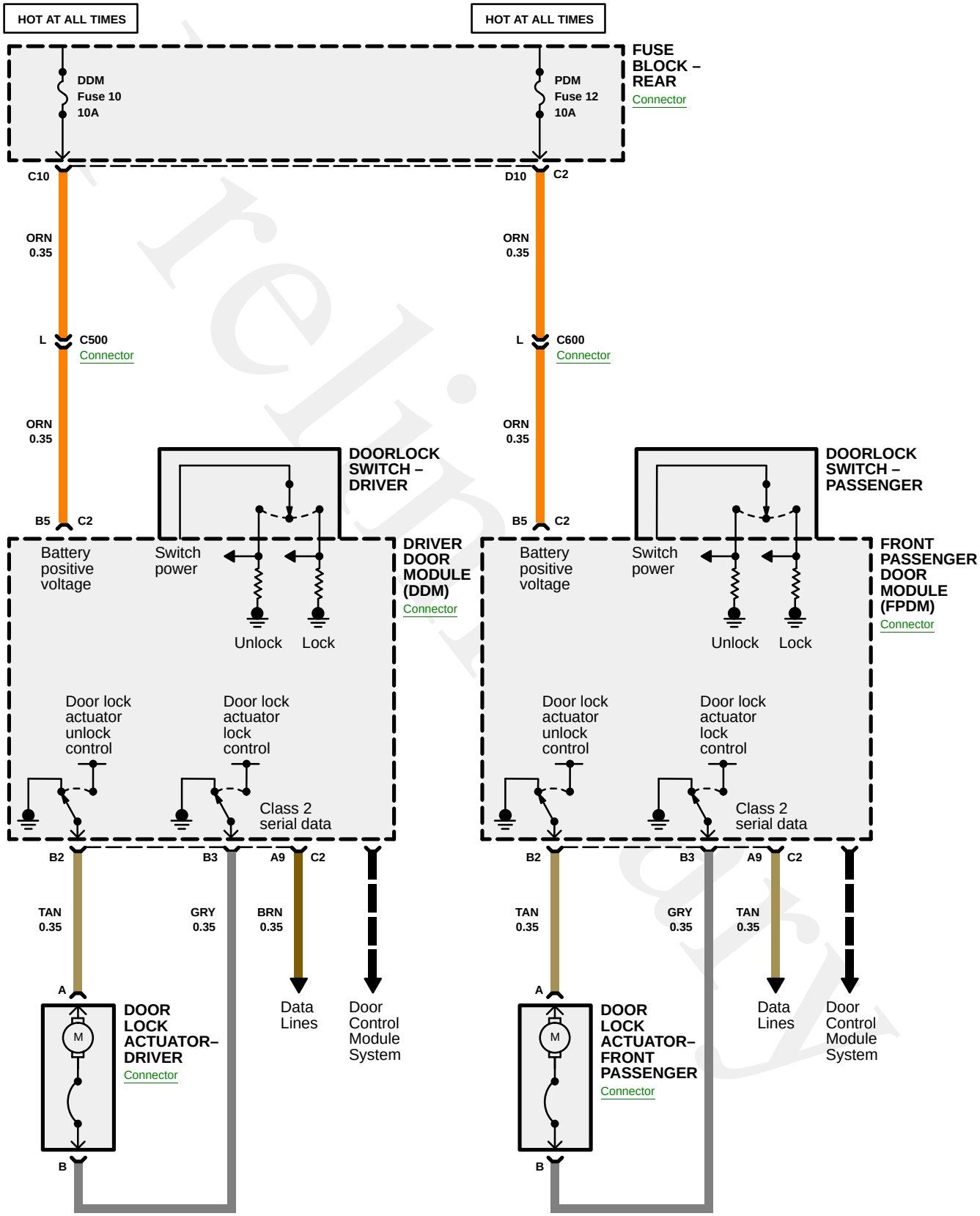

POWER DOOR LOCKS

Circuit Schematic

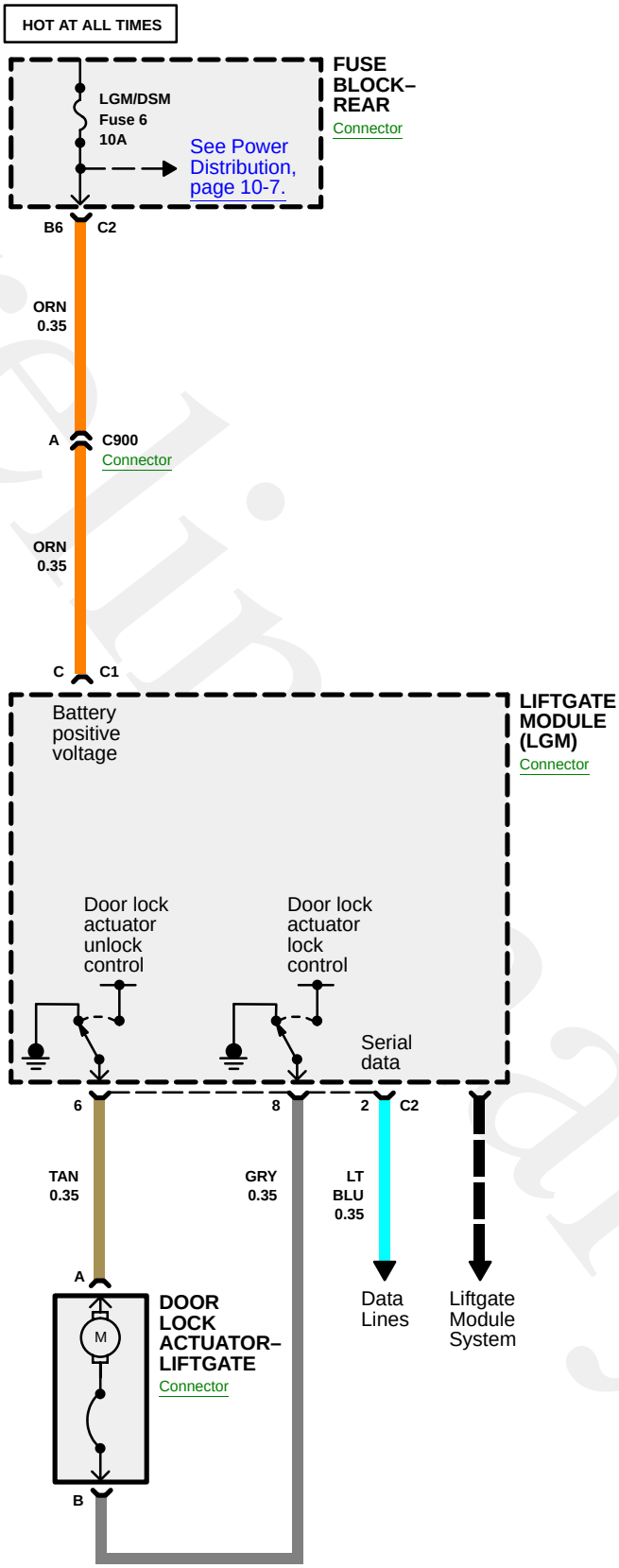

Preliminary

POWER DOOR LOCKS

Circuit Schematic

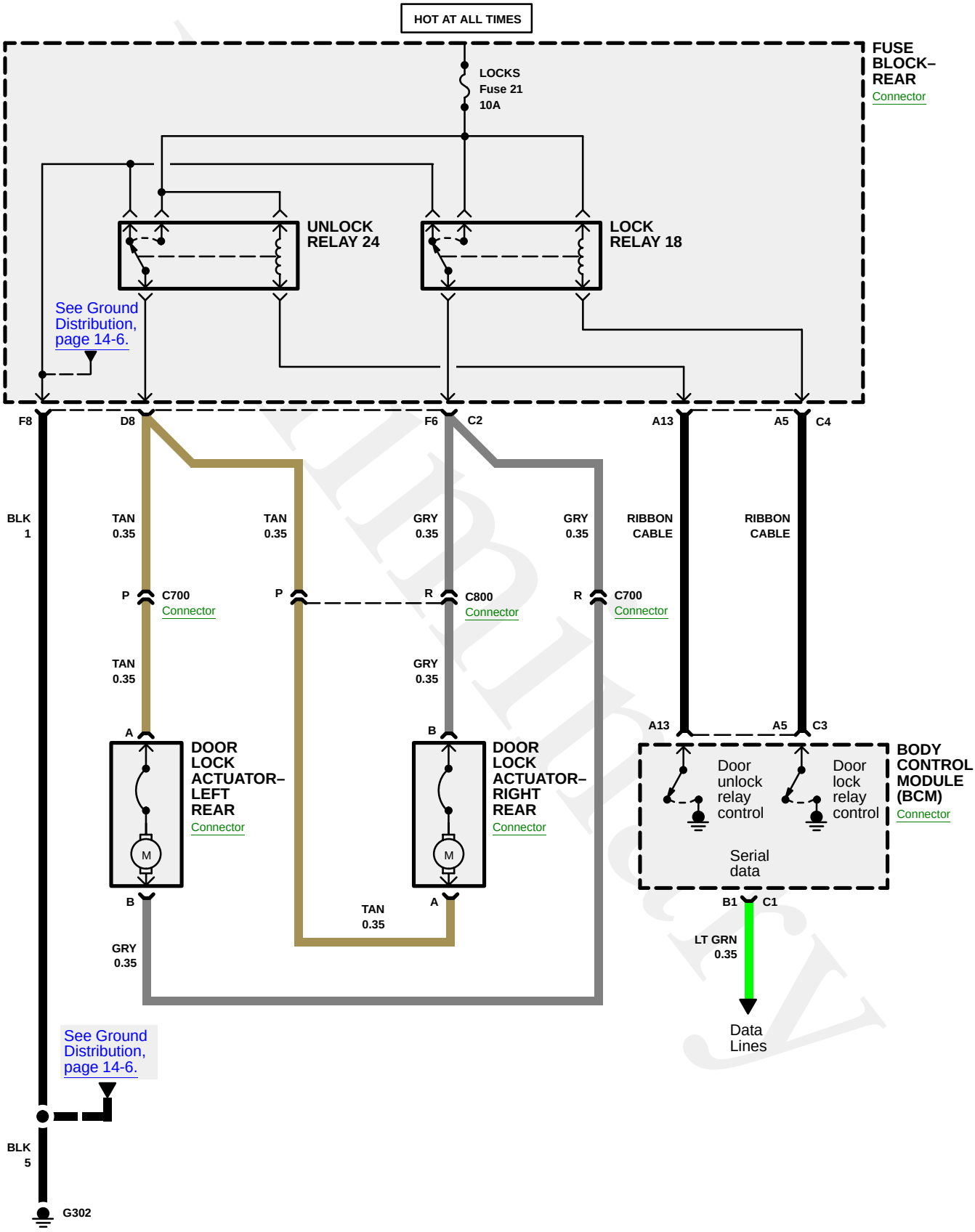

POWER DOOR LOCKS

Circuit Operation

Door Lock System Components

The power door lock system consists of the following components:

- Driver Door Module (DDM)
- Passenger Door Module (PDM)
- Liftgate Module (LGM)
- Door lock relay
- Door unlock relay
- Body Control Module (BCM)
- Reversible door lock actuators in each of the doors
- LR/RR LOCKS 10A fuse (relay supply voltage)
- Door lock switches in driver and passenger doors (switches are integral components to the DDM and PDM)

Door Lock System Controls

The power door lock system can be controlled by any of the following:

- A power door lock or unlock switch activation
- A keyless entry transmission
- An automatic door lock function
- A delay lock function
- Door lock cylinder switch activation
- Lockout Prevention
- An airbag deployment

Power Door Lock Operation

The power door lock switches are integral components of the DDM and PDM. The switches are two position normally open rocker switches. When placed in either the lock or unlock positions, the switches provide a direct input to the DDM or PDM. The DDM or PDM monitors these inputs and sends a Class 2 message indicating a change in the switch's respective position. Modules which activate the power door lock motors receive the Class 2 message and activate the motor in the appropriate direction to lock or unlock the vehicle's doors and liftgate. The modules which activate the power lock motors are:

- DDM (driver door lock actuator).
- PDM (passenger front door lock actuator).
- BCM (both rear door lock actuators).
- LGM (liftgate door lock actuator).

The DDM, PDM and LGM are directly connected to the respective door lock actuator through the door lock motor lock and unlock circuits. Once a door lock or unlock request has been received, the module will supply battery voltage to one side of the actuator and ground the other causing the doors to lock or unlock.
The rear passengers doors differ slightly in that they use lock and unlock relays. The relays supply and coil sides receive a constant voltage through the battery voltage supply circuit. The normally closed contacts are connected to ground and the control side is connected to the BCM. Once a door lock or unlock request has been received by the BCM, the BCM will ground the control side of the appropriate relay. This energizes the relay and allows voltage to be applied to either the door lock motor lock or unlock circuits. since the other side of the door lock actuator is connected to the normally closed contacts of the opposing relay to ground, the doors lock or unlock.

Preliminary

POWER DOOR LOCKS

Component Location Index

(Refer to Section 201 for photographs.)

Component		Photo No.
Body Control Module (BCM)	On Rear Fuse Block, under left rear seat	53
Door Lock Actuator-Driver	In the left front door	97
Door Lock Actuator-Front Passenger	In the right front door	97
Door Lock Actuator-Left Rear	In the left rear door	98
Door Lock Actuator-Liftgate	Inside the liftgate	114
Door Lock Actuator-Right Rear	Inside the right rear door	98
Driver Door Module (DDM)	On lower part of the driver door switch panel	95
Front Passenger Door Module (FPDM)	On lower part of passenger door switch panel	96
Fuse Block-Rear	Under the left rear seat	52
Liftgate Module (LGM)	Inside the liftgate	113
Lock Relay 18	In the Rear Fuse Block	54
Unlock Relay 24	In the Rear Fuse Block	54
Connector		
C500 (12-BLK)	Midpoint of leading edge of left front door	93
C600 (12-BLK)	Midpoint of leading edge of right front door	93
C700 (17-NAT)	Midpoint of leading edge of left rear door	94
C800 (17-NAT)	Midpoint of leading edge of right rear door	94
C900 (6-BLK)	Top of the liftgate	107
Ground		
G302	On the lower left B-pillar	105

Preliminary